TCNDK 63 Series Worm Gearbox

Universal Mount

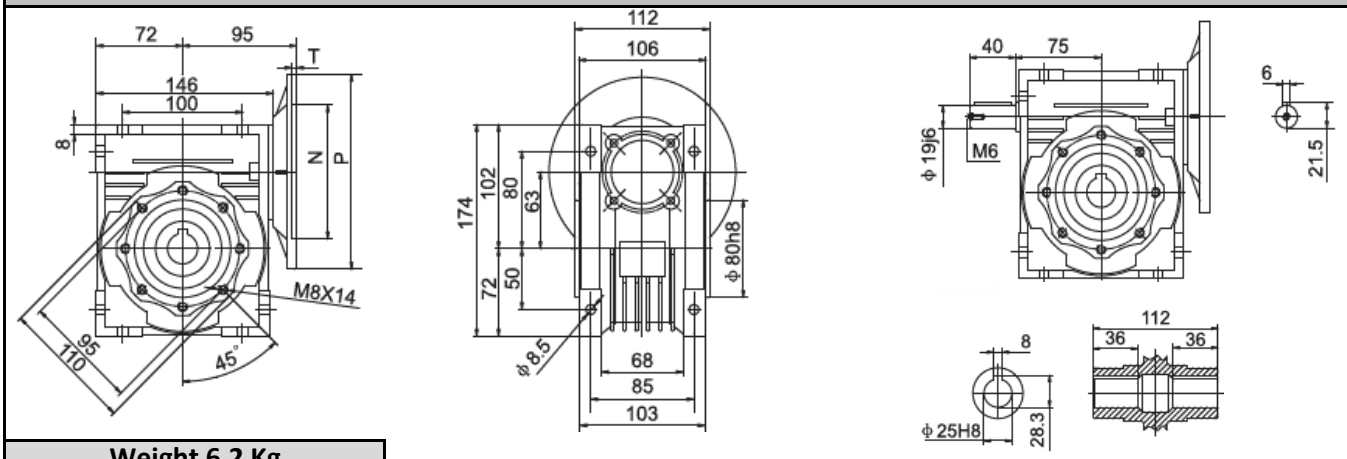

Weight 6.2 Kg

Output Flange Options

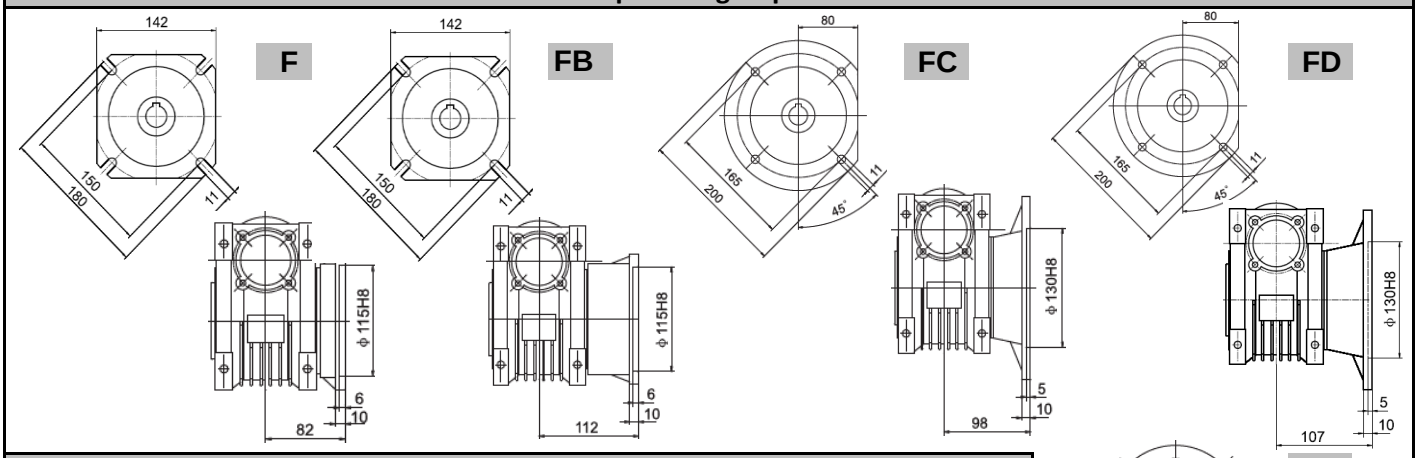

Torque Arm

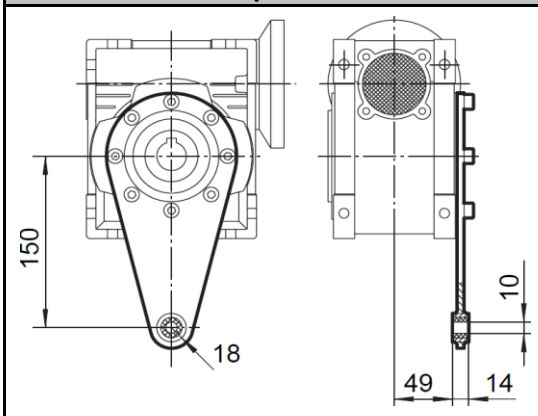

Output Shaft Options

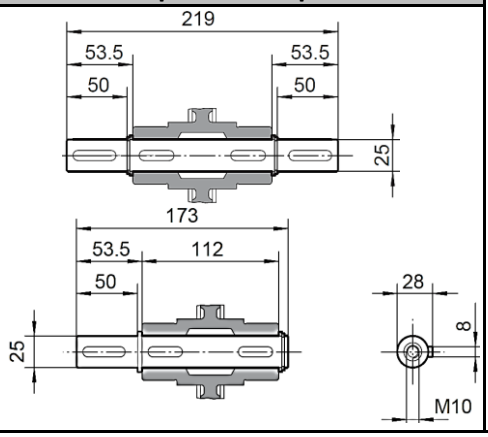

FE

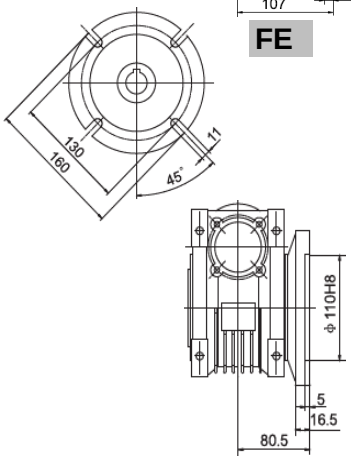

Input Motor Flange Dimensions
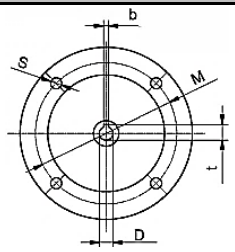
IEC	71B14	71B5	80B14	80B5	90B14	90B5
DE8	14	14	19	19	24	24
b	5	5	6	6	8	8
t	16.3	16.3	21.8	21.8	27.3	27.3
P	105	160	120	200	140	200
M	85	130	100	165	115	165
N	70	110	80	130	95	130
S	7	9	7	11	9	11
T	3	4	3.5	4	3.5	4